POSITIVE ADJUSTABLE VOLTAGE REGULATOR

TT electronics
Semelab Limited

IP117K / LM117K
IP117AK / LM117AK
IP117HVK / LM117HVK
IP117AHVK / LM117AHVK
IP317K / LM317K
IP317AK / LM317AK
IP317HVK / LM317HVK
IP317AHVK / LM317AHVK

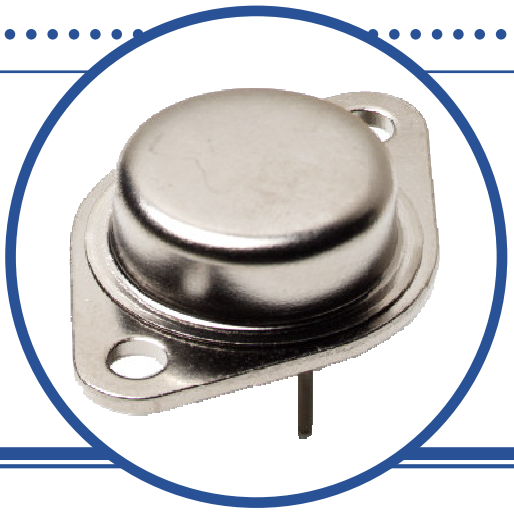

FEATURES

- 1.5A Output Current Guaranteed
- Internal Thermal Overload Protection
- Output Short Circuit Protected
- Hermetic Metal TO3 Package
- Screening Options Available

APPLICATIONS

- Adjustable Power Supplies
- System Power Supplies
- Precision Voltage / Current Regulators

DESCRIPTION

The 117/317 Series regulators are adjustable 3 terminal voltage regulators capable of supplying in excess of 1.5A over an output voltage range of 1.25V to 40V (HV Series, 60V). The regulators are exceptionally easy to apply requiring only 2 external resistors to set the output voltage.

Every effort has been made to make these devices easy to use and difficult to damage. Internal current limiting and power limiting coupled with true thermal limiting prevents damage due to overloads or shorts, even if the regulators are not fastened to a heat sink.

ABSOLUTE MAXIMUM RATINGS (T_C = 25°C unless otherwise stated)

V_I - V_O	Input – Output Voltage Differential	Standard	40V
		HV Series	60V
I_O	Output Current		Internally Limited
P_D	Power Dissipation		Internally Limited
T_J	Operating Junction Temperature Range	117 Series	-55 to +150°C
		317 Series	0 to +125°C
T_{stg}	Storage Temperature Range		-65 to +150°C

THERMAL PROPERTIES

Symbols	Parameters	Min.	Typ.	Max.	Units
$R_{\theta JC}$	Thermal Resistance, Junction To Case			3	°C/W

** This datasheet supersedes document 2829

Semelab Limited reserves the right to change test conditions, parameter limits and package dimensions without notice. Information furnished by Semelab is believed to be both accurate and reliable at the time of going to press. However Semelab assumes no responsibility for any errors or omissions discovered in its use. Semelab encourages customers to verify that datasheets are current before placing orders.

SEMELAB
A subsidiary of TT electronics plc.

Semelab Limited Coventry Road, Lutterworth, Leicestershire, LE17 4JB
Telephone +44 (0) 1455 556565 Fax +44 (0) 1455 552612 Email: sales@semelab-tt.com Website: http://www.semelab-tt.com

ELECTRICAL CHARACTERISTICS(1)(3) (T_C = 25°C unless otherwise stated)

LM117, IP117, LM117HV, IP117HV								
Symbols	**Parameters**	**Test Conditions**			**Min.**	**Typ**	**Max.**	**Units**
V_{REF}	Reference Voltage	I_{OUT} = 10mA			1.200	1.250	1.300	V
		10mA ≤ I_{OUT} ≤ I_{MAX}, P ≤ P_{MAX}, 3V ≤ (V_{IN}-V_{OUT}) ≤ V_{MAX}		•	1.200	1.250	1.300	
$\frac{\Delta V_{OUT}}{\Delta V_{IN}}$	Line Regulation (2)	3V ≤ (V_{IN}-V_{OUT}) ≤ V_{MAX}, I_{OUT} = 10mA				0.010	0.020	%/V
				•		0.020	0.050	
$\frac{\Delta V_{OUT}}{\Delta I_{OUT}}$	Load Regulation (2)(3)	10mA ≤ I_{OUT} ≤ I_{MAX}	V_{OUT} ≤ 5V			5	15	mV
			V_{OUT} ≥ 5V			0.1	0.3	%
			V_{OUT} ≤ 5V	•		20	50	mV
			V_{OUT} ≥ 5V	•		0.3	1.0	%
	Thermal Regulation	V_{IN} = 14.58V, I_{OUT} = 1.5A, P_D = 20W, T_A = 25°C, 20ms Pulse				0.030	0.070	%/W
	Ripple Rejection	V_{OUT} = 10V, f = 120Hz	C_{ADJ} = 0			65		dB
			C_{ADJ} = 10μF	•	66	80		
I_{ADJ}	Adjust Pin Current			•		50	100	μA
ΔI_{ADJ}	Adjust Pin Current Change	10mA ≤ I_{OUT} ≤ I_{MAX}, 2.5V ≤ (V_{IN}-V_{OUT}) ≤ V_{MAX}		•		0.2	5	
I_{MIN}	Minimum Load Current	(V_{IN} - V_{OUT}) = 40V		•		3.5	5	mA
		(V_{IN} - V_{OUT}) = 60V **(HV Series)**		•		3.5	7	
I_{CL}	Current Limit	(V_{IN} - V_{OUT}) ≤ 15V		•	1.5	2.2		A
		(V_{IN} - V_{OUT}) = 40V		•	0.3	0.5		
		(V_{IN} - V_{OUT}) = 60V **(HV Series)**		•		0.1		
$\frac{\Delta V_{OUT}}{\Delta TEMP}$	Temperature Stability			•		1.0		%
$\frac{\Delta V_{OUT}}{\Delta TIME}$	Long Term Stability	T_A = 125°C, 1000Hrs				0.3	1.0	
e_n	RMS Output Noise (% of V_{OUT})	T_A = 25°C, 10Hz ≤ f ≤ 10KHz				0.001		

Notes
The ● denotes the specifications which apply over the full operating temperature range.

(1) Test conditions unless otherwise stated: V_{IN} - V_{OUT} = 5V, I_{OUT} = 0.5A, P_{MAX} = 20W, I_{MAX} = 1.5A

(2) Regulation is measured at constant junction temperature, using pulse testing at a low duty cycle. Changes in output voltage due to heating effects are covered under thermal regulation specifications. Load regulation is measured at $^1/_8$" below the bottom of the package.

(3) V_{MAX} = 40V for LM117, IP117, LM117A, IP117A, LM317, IP317, LM317A, IP317A
V_{MAX} = 60V for LM117HV, IP117HV, LM117AHV, IP117AHV, LM317HV, IP317HV, LM317AHV, IP317AHV

ELECTRICAL CHARACTERISTICS(1)(3) (T_C = 25°C unless otherwise stated)

LM117A, IP117A, LM117AHV, IP117AHV								
Symbols	**Parameters**	**Test Conditions**			**Min.**	**Typ**	**Max.**	**Units**
V_{REF}	Reference Voltage	I_{OUT} = 10mA			1.238	1.250	1.262	V
		10mA ≤ I_{OUT} ≤ I_{MAX}, P ≤ P_{MAX}, 3V ≤ (V_{IN}-V_{OUT}) ≤ V_{MAX}		●	1.225	1.250	1.270	
$\frac{\Delta V_{OUT}}{\Delta V_{IN}}$	Line Regulation (2)	3V ≤ (V_{IN}-V_{OUT}) ≤ V_{MAX}, I_{OUT} = 10mA				0.005	0.010	%/V
				●		0.010	0.020	
$\frac{\Delta V_{OUT}}{\Delta I_{OUT}}$	Load Regulation (2)(3)	10mA ≤ I_{OUT} ≤ I_{MAX}	V_{OUT} ≤ 5V			5	15	mV
			V_{OUT} ≥ 5V			0.1	0.3	%
			V_{OUT} ≤ 5V	●		15	50	mV
			V_{OUT} ≥ 5V	●		0.3	1.0	%
	Thermal Regulation	V_{IN} = 14.58V, I_{OUT} = 1.5A, P_D = 20W, T_A = 25°C, 20ms Pulse				0.002	0.020	%/W
	Ripple Rejection	V_{OUT} = 10V, f = 120Hz	C_{ADJ} = 0			65		dB
			C_{ADJ} = 10μF	●	66	80		
I_{ADJ}	Adjust Pin Current			●		50	100	μA
ΔI_{ADJ}	Adjust Pin Current Change	10mA ≤ I_{OUT} ≤ I_{MAX}, 2.5V ≤ (V_{IN}-V_{OUT}) ≤ V_{MAX}		•		0.2	5	
I_{MIN}	Minimum Load Current	(V_{IN} - V_{OUT}) = 40V		●		3.5	5	mA
		(V_{IN} - V_{OUT}) = 60V **(HV Series)**		●		3.5	7	
I_{CL}	Current Limit	(V_{IN} - V_{OUT}) ≤ 15V		●	1.5	2.2		A
		(V_{IN} - V_{OUT}) = 40V		●	0.3	0.5		
		(V_{IN} - V_{OUT}) = 60V **(HV Series)**		●		0.1		
$\frac{\Delta V_{OUT}}{\Delta TEMP}$	Temperature Stability			●		1.0	2	%
$\frac{\Delta V_{OUT}}{\Delta TIME}$	Long Term Stability	T_A = 125°C, 1000Hrs				0.3	1.0	
e_n	RMS Output Noise (% of V_{OUT})	T_A = 25°C, 10Hz ≤ f ≤ 10KHz				0.001		

Notes
The ● denotes the specifications which apply over the full operating temperature range.

(1) Test conditions unless otherwise stated: V_{IN} - V_{OUT} = 5V, I_{OUT} = 0.5A, P_{MAX} = 20W, I_{MAX} = 1.5A

(2) Regulation is measured at constant junction temperature, using pulse testing at a low duty cycle. Changes in output voltage due to heating effects are covered under thermal regulation specifications. Load regulation is measured at $^1/_8$" below the bottom of the package.

(3) V_{MAX} = 40V for LM117, IP117, LM117A, IP117A, LM317, IP317, LM317A, IP317A
V_{MAX} = 60V for LM117HV, IP117HV, LM117AHV, IP117AHV, LM317HV, IP317HV, LM317AHV, IP317AHV

ELECTRICAL CHARACTERISTICS(1)(3) (T_C = 25°C unless otherwise stated)

LM317, IP317, LM317HV, IP317HV								
Symbols	**Parameters**	**Test Conditions**			**Min.**	**Typ**	**Max.**	**Units**
V_{REF}	Reference Voltage	I_{OUT} = 10mA			1.200	1.250	1.300	V
		10mA ≤ I_{OUT} ≤ I_{MAX}, P ≤ P_{MAX}, 3V ≤ (V_{IN}-V_{OUT}) ≤ V_{MAX}		●	1.200	1.250	1.300	
$\frac{\Delta V_{OUT}}{\Delta V_{IN}}$	Line Regulation (2)	3V ≤ (V_{IN}-V_{OUT}) ≤ V_{MAX}, I_{OUT} = 10mA				0.010	0.040	%/V
				●		0.020	0.070	
$\frac{\Delta V_{OUT}}{\Delta I_{OUT}}$	Load Regulation (2)(3)	10mA ≤ I_{OUT} ≤ I_{MAX}	V_{OUT} ≤ 5V			5	25	mV
			V_{OUT} ≥ 5V			0.1	0.5	%
			V_{OUT} ≤ 5V	●		20	70	mV
			V_{OUT} ≥ 5V	●		0.3	1.5	%
	Thermal Regulation	V_{IN} = 14.58V, I_{OUT} = 1.5A, P_D = 20W, T_A = 25°C, 20ms Pulse				0.030	0.070	%/W
	Ripple Rejection	V_{OUT} = 10V, f = 120Hz	C_{ADJ} = 0			65		dB
			C_{ADJ} = 10μF	●	66	80		
I_{ADJ}	Adjust Pin Current			●		50	100	μA
ΔI_{ADJ}	Adjust Pin Current Change	10mA ≤ I_{OUT} ≤ I_{MAX}, 2.5V ≤ (V_{IN}-V_{OUT}) ≤ V_{MAX}		●		0.2	5	
I_{MIN}	Minimum Load Current	(V_{IN} - V_{OUT}) = 40V		●		3.5	10	mA
		(V_{IN} - V_{OUT}) = 60V **(HV Series)**		●		3.5	12	
I_{CL}	Current Limit	(V_{IN} - V_{OUT}) ≤ 15V		●	1.5	2.2		A
		(V_{IN} - V_{OUT}) = 40V		●	0.15	0.4		
		(V_{IN} - V_{OUT}) = 60V **(HV Series)**		●		0.1		
$\frac{\Delta V_{OUT}}{\Delta TEMP}$	Temperature Stability			●		1.0		%
$\frac{\Delta V_{OUT}}{\Delta TIME}$	Long Term Stability	T_A = 125°C, 1000Hrs				0.3	1.0	
e_n	RMS Output Noise (% of V_{OUT})	T_A = 25°C, 10Hz ≤ f ≤ 10KHz				0.003		

Notes
The ● denotes the specifications which apply over the full operating temperature range.

(1) Test conditions unless otherwise stated: V_{IN} - V_{OUT} = 5V, I_{OUT} = 0.5A, P_{MAX} = 20W, I_{MAX} = 1.5A

(2) Regulation is measured at constant junction temperature, using pulse testing at a low duty cycle. Changes in output voltage due to heating effects are covered under thermal regulation specifications. Load regulation is measured at $^1/_8$" below the bottom of the package.

(3) V_{MAX} = 40V for LM117, IP117, LM117A, IP117A, LM317, IP317, LM317A, IP317A
V_{MAX} = 60V for LM117HV, IP117HV, LM117AHV, IP117AHV, LM317HV, IP317HV, LM317AHV, IP317AHV

ELECTRICAL CHARACTERISTICS(1)(3) (T_C = 25°C unless otherwise stated)

LM317A, IP317A, LM317AHV, IP317AHV								
Symbols	**Parameters**	**Test Conditions**			**Min.**	**Typ**	**Max.**	**Units**
V_{REF}	Reference Voltage	I_{OUT} = 10mA			1.238	1.250	1.262	V
		10mA ≤ I_{OUT} ≤ I_{MAX}, P ≤ P_{MAX}, 3V ≤ (V_{IN}-V_{OUT}) ≤ V_{MAX}		●	1.225	1.250	1.270	
$\frac{\Delta V_{OUT}}{\Delta V_{IN}}$	Line Regulation (2)	3V ≤ (V_{IN}-V_{OUT}) ≤ V_{MAX}, I_{OUT} = 10mA				0.005	0.010	%/V
				●		0.010	0.020	
$\frac{\Delta V_{OUT}}{\Delta I_{OUT}}$	Load Regulation (2)(3)	10mA ≤ I_{OUT} ≤ I_{MAX}	V_{OUT} ≤ 5V			5	25	mV
			V_{OUT} ≥ 5V			0.1	0.5	%
			V_{OUT} ≤ 5V	●		15	50	mV
			V_{OUT} ≥ 5V	●		0.3	1.0	%
	Thermal Regulation	V_{IN} = 14.58V, I_{OUT} = 1.5A, P_D = 20W, T_A = 25°C, 20ms Pulse				0.002	0.020	%/W
	Ripple Rejection	V_{OUT} = 10V, f = 120Hz	C_{ADJ} = 0			65		dB
			C_{ADJ} = 10μF	●	66	80		
I_{ADJ}	Adjust Pin Current			●		50	100	μA
ΔI_{ADJ}	Adjust Pin Current Change	10mA ≤ I_{OUT} ≤ I_{MAX}, 2.5V ≤ (V_{IN}-V_{OUT}) ≤ V_{MAX}		•		0.2	5	
I_{MIN}	Minimum Load Current	(V_{IN} - V_{OUT}) = 40V		●		3.5	10	mA
		(V_{IN} - V_{OUT}) = 60V **(HV Series)**		●		3.5	12	
I_{CL}	Current Limit	(V_{IN} - V_{OUT}) ≤ 15V		●	1.5	2.2		A
		(V_{IN} - V_{OUT}) = 40V		●	0.15	0.4		
		(V_{IN} - V_{OUT}) = 60V **(HV Series)**		●		0.1		
$\frac{\Delta V_{OUT}}{\Delta TEMP}$	Temperature Stability			●		1.0	2	%
$\frac{\Delta V_{OUT}}{\Delta TIME}$	Long Term Stability	T_A = 125°C, 1000Hrs				0.3	1.0	
e_n	RMS Output Noise (% of V_{OUT})	T_A = 25°C, 10Hz ≤ f ≤ 10KHz				0.003		

Notes
The ● denotes the specifications which apply over the full operating temperature range.

(1) Test conditions unless otherwise stated: V_{IN} - V_{OUT} = 5V, I_{OUT} = 0.5A, P_{MAX} = 20W, I_{MAX} = 1.5A

(2) Regulation is measured at constant junction temperature, using pulse testing at a low duty cycle. Changes in output voltage due to heating effects are covered under thermal regulation specifications. Load regulation is measured at $^1/_8$" below the bottom of the package.

(3) V_{MAX} = 40V for LM117, IP117, LM117A, IP117A, LM317, IP317, LM317A, IP317A
V_{MAX} = 60V for LM117HV, IP117HV, LM117AHV, IP117AHV, LM317HV, IP317HV, LM317AHV, IP317AHV

APPLICATIONS INFORMATION

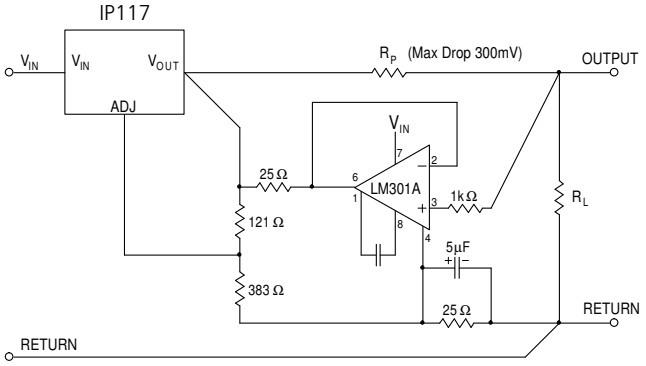

Remote Sensing

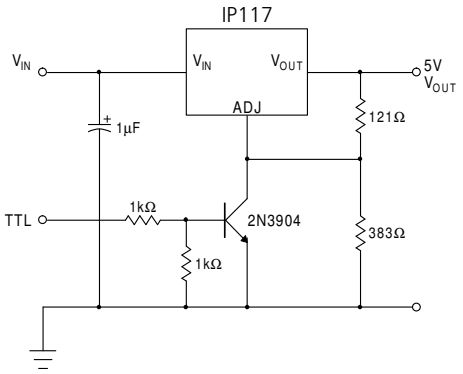

5V Regulator with Shut Down

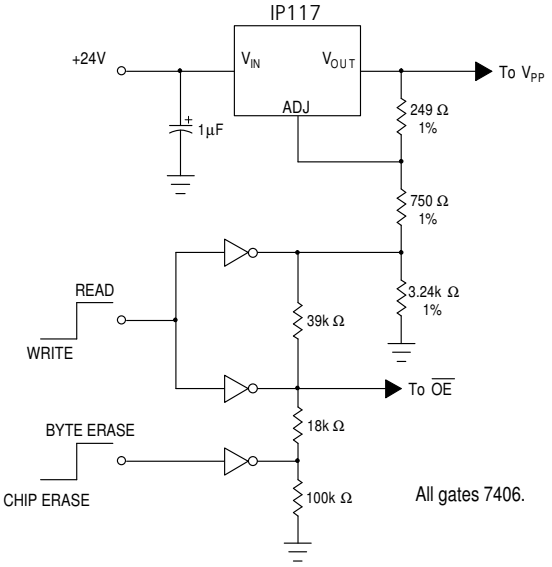

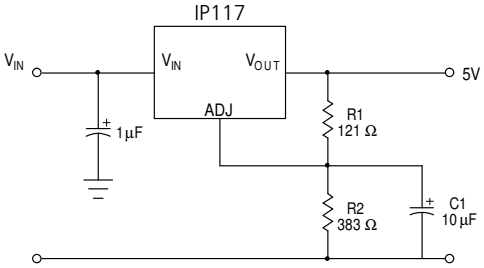

C1 improves ripple rejection
Xc should be small compared to R2

Improving Ripple Rejection

	OE	Vpp
READ	0V	5V
WRITE		
BYTE	5V	21V
CHIP ERASE	12V	21V

2816 EEPROM Supply Programmer for Read / Write Control

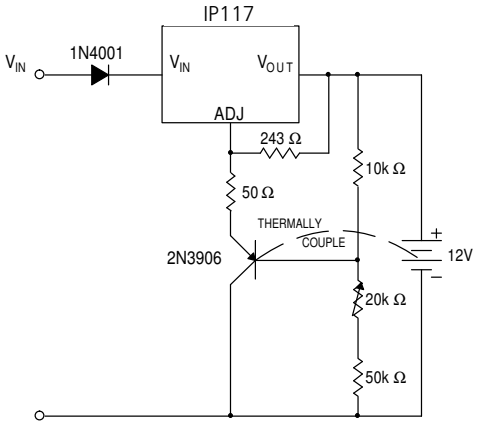

Temperature Compensated Lead-Acid Battery Charger

MECHANICAL DATA

Dimensions in mm (inches)

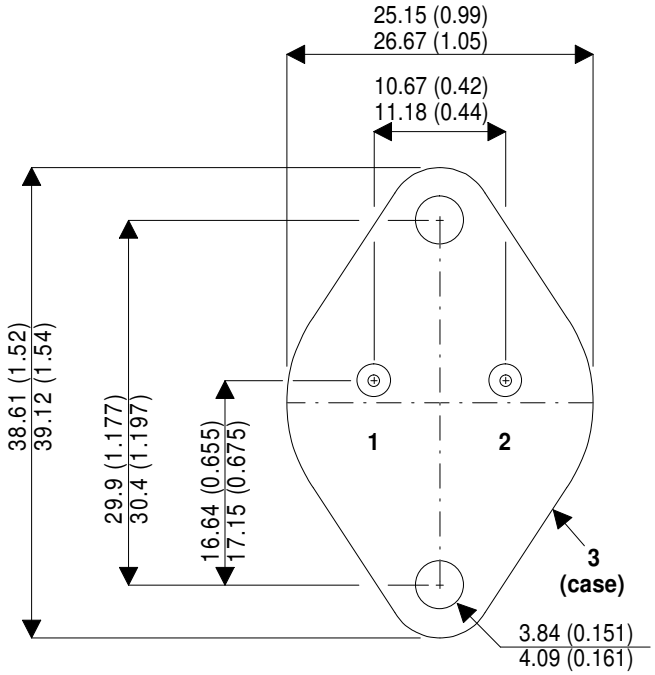

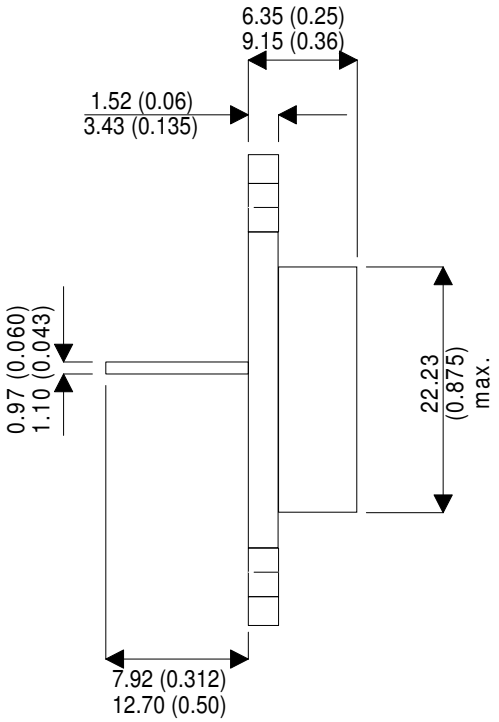

TO3 (TO-204AA)

Pin 1 = ADJ. Pin 2 = V_{IN} Case = V_{OUT}